MicronView

Remote APC

Airborne Particle Counter - Remote

The remote APC offers precise flow control through two configurations: an external blower unit with an integrated flow meter for independent, high-accuracy sampling, or a central vacuum pump with a restriction orifice. This flexible setup is ideal for distributed monitoring in large-scale cleanrooms.

Optimized for continuous particle monitoring, the system is well-suited for production environments in industries such as electronics manufacturing, pharmaceuticals, and medical devices. Its modular architecture enables rapid deployment and ensures compatibility with multiple communication protocols, making it the go-to solution for cleanroom environments that demand exceptional performance and compliance.

Flexible Configuration & Reliable Performance

- Independent sampling control via optional external blower units
- Seamless maintenance continuity: Rapid swap to backup blower units ensures uninterrupted operation

Features

- Size Channels: 0.3μm, 0.5μm, 5.0μm
- Flow Rate: 28.3L/min±5%
- Communication: RJ45,RS485
- Data Storage: By default, 1440 sets of cached data
- Status Light: Identifies power and sampling status
- Alarm Light: Identifies laser and flow rate errors
- Power: PoE or 100-240V,50Hz/60HzAC to 24VDC input power supply

Model: A5301

Product Dimensions

Lateral view

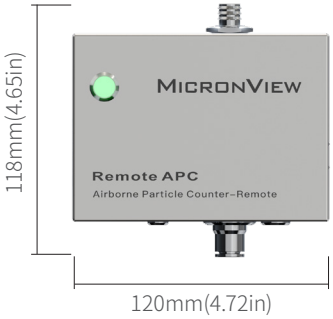

Front view

Blower Configurations

- Blower Configuration 1: Central Pump Solution

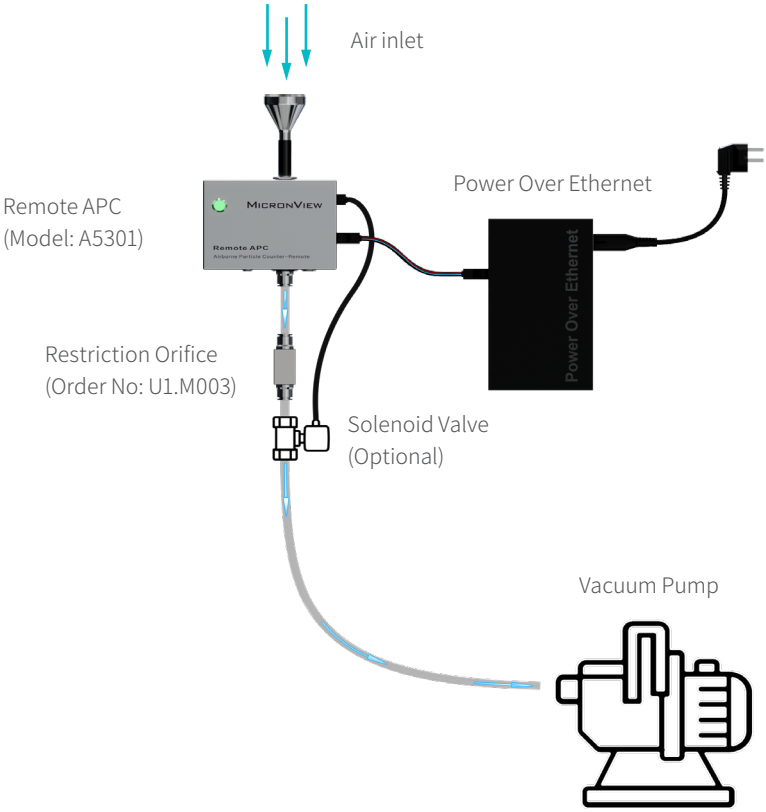

■ Blower Configuration 2: External Blower Unit Solution

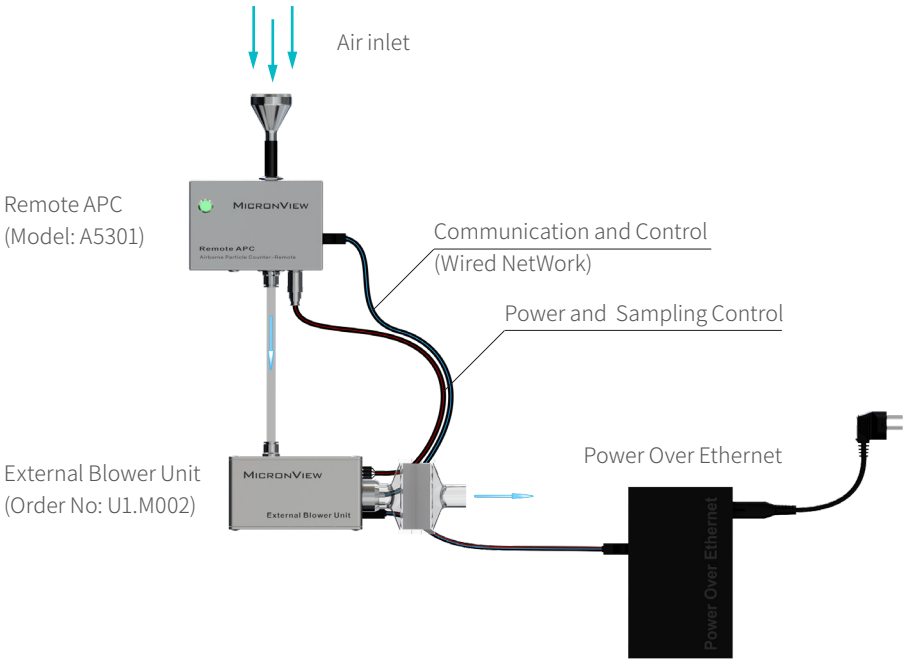

Specifications and Order Information

Parameters	Remote APC
Flow Rate	28.3LPM ± 5%
Size Range	0.3μm to 25μm
Channels	0.3μm, 0.5μm, 5.0μm
Particle Size Resolution	<15% @ 0.5μm (Meets ISO 21501-4)
Counting Efficiency	0.3μm : 50% ±20%，>0.45μm: 100% ±10% (Meets ISO 21501-4 and JIS B9921)
Concentration Upper Limit	450,000 particles/ft^3, 10% Superposition Error
Zero Count	<1count/5 min
Laser	Long life laser
Communication	RJ45, RS485
Data Storage	By default, 1440 sets of cached data
Alarm	Alarm light
Display	Status light
Calibration Frequency	Recommended once a year
Calibration Criterion	Compliant with ISO 21501-4
Dimensions (H×W×D)	118×120×70 mm；4.65×4.72×2.76 in
Weight	0.74 kg/ 1.63 lbs

Parameters	Remote APC
Enclosure	316L stainless steel
Power	PoE； 100-240V,50Hz/60HzAC to 24VDC input power supply, plug compatible with standard interface types
Maximum Power Consumption	Sensor <13w, connected external power unit <30w
Operating Conditions	Operating temperature: 5-35°C (41°F-95°F); Relative humidity: 5-90% non-condensing
Storage Condition	Storage temperature: 0-40°C (32°F-104°F); Relative humidity: 5-95% non-condensing
Safety	EN 61010-1:2010, EN 61326-1:2013, EN IEC 61326-1:2021
Warranty	24 months (starting from the date of activation of the product or 6 months after delivery, whichever comes first)

Parameters	External Blower Unit
Dimensions（H×W×D）	71×135×104 mm；2.80×5.32×4.09 in
Weight	0.74 kg/ 1.63 lbs
Enclosure	Aluminium alloy
Operating Conditions	Operating temperature: 5-35°C (41°F-95°F); Relative humidity: 5-90% non-condensing
Storage Condition	Storage temperature: 0-40°C (32°F-104°F); Relative humidity: 5-95% non-condensing
Warranty	12 months (starting from the date of activation of the product or 6 months after delivery, whichever comes first)

Ordering Information

Name	Model	Order No.
Airborne Particle Counter- Remote | Remote APC	A5301	MACHA5301
External Blower Unit	N/A	U1.M002
Restriction Orifice	N/A	U1.M003
Isokinetic Probe	N/A	S1.0282

MICRONVIEW

Address: 2300 Highway 365 Suite 110, Nederland TX 77627, USA
Website: www.micronview.com
Email: mv@micronview.com
Tel: 1-520-528-1882

LinkedIn